PRESSURE FILTER, change-over
Series HDD 61-151 DN 25 PN 315

Sheet No.
2517 D

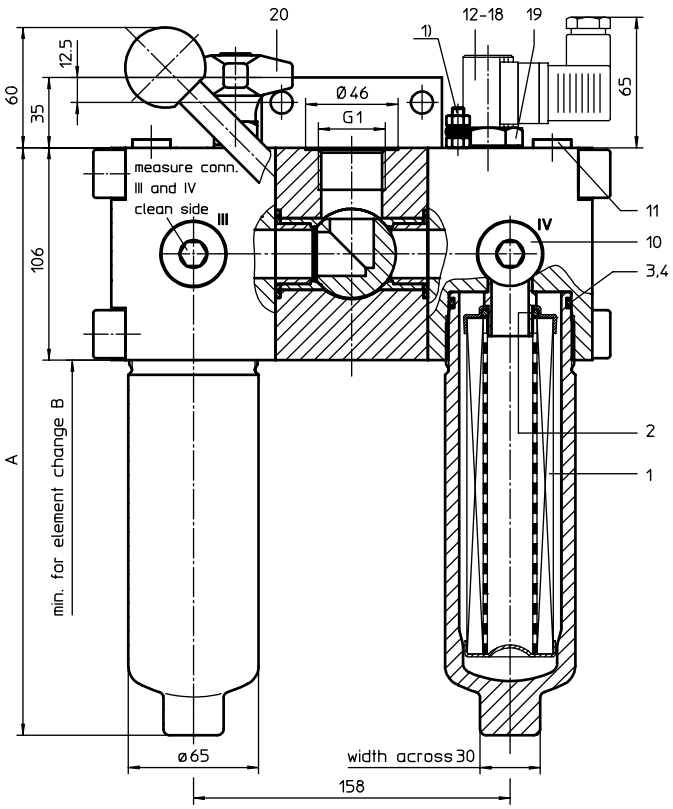

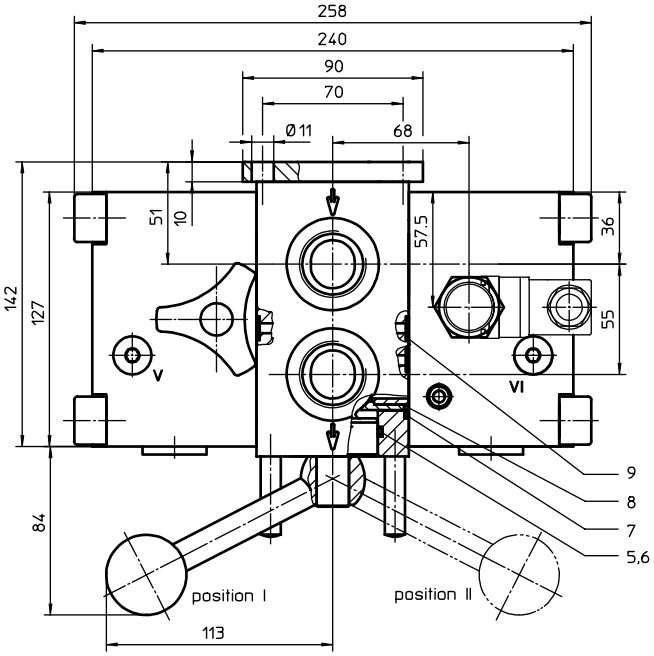

Pos. I: left filter-side in operation
Pos. II: right filter-side in operation

Connection V and VI to be used to bleed filter or to relieve pressure

1) connection for the potential equalisation, only for the application in the explosive area.

1. Type index:

1.1. Complete filter: (ordering example)

HDD. 91. 10VG. HR. E. P. -. G. 5. -. -. AE

1	2	3	4	5	6	7	8	9	10	11	12

1 **series:**
HDD = pressure filter, change-over

2 **nominal size:** 61, 91, 151

3 **filter-material and filter- fineness:**
25 VG = 20 $\mu m_{(c)}$, 16 VG= 15 $\mu m_{(c)}$, 10 VG= 10 $\mu m_{(c)}$,
6 VG = 7 $\mu m_{(c)}$, 3 VG= 5 $\mu m_{(c)}$ Interpor fleece (glass fibre)

4 **resistance of pressure difference for filter element:**
30 = Δp 30 bar
HR = Δp 160 bar (rupture strength Δp 250 bar)

5 **filter element design:**
E = single-end open

6 **sealing material:**
P = Nitrile (NBR)
V = Viton (FPM)

7 **filter element specification:** (see catalog)
- = standard
VA = stainless steel
IS06 = see sheet-no. 31601

8 **connection:**
G = thread connection according to ISO 228

9 **connection size:**
5 = G 1

10 **filter housing specification:** (see catalog)
- = standard
IS06 = see sheet-no. 31605

11 **internal valve:**
- = without valve
S1 = with by-pass valve Δp 3,5 bar
S2 = with by-pass valve Δp 7,0 bar
R = reversing valve, Q ≤ 70,06 l/min

12 **clogging indicator or clogging sensor:**
- = without
AOR = visual, see sheet-no. 1606
AOC = visual, see sheet-no. 1606
AE = visual-electrical, see sheet-no. 1615
VS1 = electronical, see sheet-no. 1617
VS2 = electronical, see sheet-no. 1618

1.2. Filter element: (ordering example)

01E. 90. 10VG. HR. E. P. -

1	2	3	4	5	6	7

1 **series:**
01E. = filter element according to INTERNORMEN factory specification

2 **nominal size:** 60, 90, 150

3 - 7 see type index-complete filter

2. Accessories:

- measure- and bleeder connection, see sheet-no. 1650

3. Dimensions:

type	connection	A	B	weight kg	volume tank
HDD 61	G1	228	275	24	2x 0,3 l
HDD 91		293	340	25	2x 0,4 l
HDD 151		402	450	27	2x 0,6 l

EDV 11/07

Changes of measures and design are subject to alteration!

internormen technology

Friedensstrasse 41, 68804 Altlussheim, Germany

phone +49 - (0)6205 - 2094-0
fax +49 - (0)6205 - 2094-40
e-mail sales@internormen.com
url www.internormen.com

4. Spare parts:

item	qty.	designation	dimension HDD 61	HDD 91	HDD 151	article-no.	
1	2	filter element	01E.60	01E.90	01E.150		
2	2	O-ring	22 x 3,5			304341 (NBR)	304392 (FPM)
3	2	O-ring	54 x 3			304657 (NBR)	304720 (FPM)
4	2	support ring	61 x 2,6 x 1			304660	
5	3	O-ring	45 x 3			304991 (NBR)	304997 (FPM)
6	2	support ring	49,7 x 2,4 x 1			317709	
7	4	O-ring	38 x 3			304340 (NBR)	317013 (FPM)
8	4	O-ring	28 x 3			316778 (NBR)	- (FPM)
9	4	O-ring	8 x 2			310004 (NBR)	316530 (FPM)
10	2	screw plug	G ¾			308529	
11	2	screw plug	G ¼			305003	
12	1	clogging indicator, visual	AOR or AOC			see sheet-no. 1606	
13	1	clogging indicator, visual-electrical	AE			see sheet-no. 1615	
14	1	clogging sensor, electronical	VS1			see sheet-no. 1617	
15	1	clogging sensor, electronical	VS2			see sheet-no. 1618	
16	1	O-ring	15 x 1,5			315357 (NBR)	315427 (FPM)
17	1	O-ring	22 x 2			304708 (NBR)	304721 (FPM)
18	1	O-ring	14 x 2			304342 (NBR)	304722 (FPM)
19	1	screw plug	20913-4			309817	
20	1	pressure balance valve					

item 19 execution only without clogging indicator or clogging sensor

5. Description:

Duplex pressure filters with change-over valve type HDD are suitable for a working pressure up to 315 bar.
The pressure peaks are absorbed by a sufficient margin of safety. Duplex filters can be serviced without interruption of operation. The upper part has a three-way-change-over valve which allows to change-over the flow from the dirty filter-side to the clean filter-side without interrupting the operation. The change-over procedure does not lead to a cross sectional contraction. Prior to the change-over procedure a built-in pressure balance valve equalizes the housing pressure. After change-over the pressure balance valve is to be closed again. The closed filter-side has to be air-bled by vent V respectively by vent VI. Then change filter element. After screw in the filter bowl the pressure balance has to be opened shortly and the just serviced filter-side has to be air-bled. Filter elements are available down to a filter fineness of 4 $\mu m_{(c)}$.
INTERNORMEN-Filter elements are known as elements with a high intrinsic stability and an excellent filtration capability, a high dirt-retaining capacity and a long service life.
INTERNORMEN-Filter are suitable for all petroleum based fluids, HW-emulsions, most synthetic hydraulic fluids and lubrication oils.
INTERNORMEN-Filter elements are available with a pressure difference resistance up to Δp 160 bar and a rupture strength up to Δp 250 bar.
The internal valves are integrated into the centering pivot for the filter element. After reaching the opening pressure the by-pass valve causes that an unfiltered partial flow passes the filter. With the reverse valve a protection of the filter element is given when having a reverse flow inside the filter. The reverse flow will not be filtered.

6. Technical data:

temperature range:	-10°C to +80°C (for a short time +100°C)
operating medium:	mineral oil, other media on request
max. operating pressure:	315 bar
test pressure:	410 bar
connection system:	thread connection according to ISO 228
housing material:	C-steel
sealing material:	Nitrile (NBR) or Viton (FPM), other materials on request
installation position:	vertical
air bleeding and mini-measuring connections dirt side:	G ¼
measuring connections clean side:	G ¾

Classified under the Pressure Equipment Directive 97/23/EC for mineral oil (fluid group 2), Article 3, Para. 3.
Classified under ATEX Directive 94/9/EC according to specific application (see questionnaire sheet-no. 34279-4).

7. Symbols:

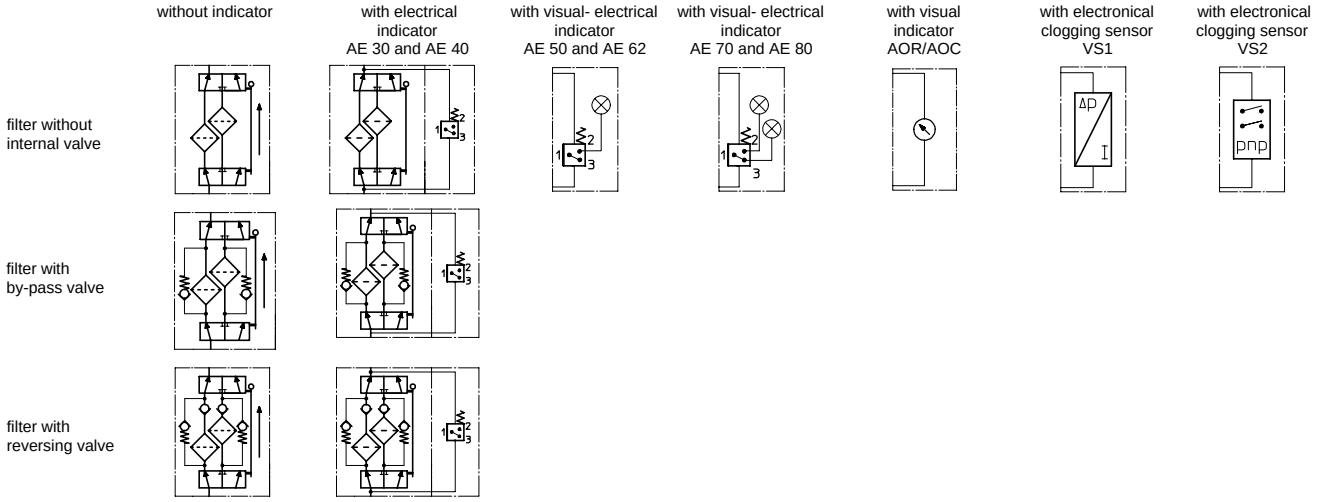

8. Pressure drop flow curves:

Precise flow rates see 'INT-Expert-System Filter' respectively Δp-curves ; depending on filter fineness and viscosity.

9. Test methods:

Filter elements are tested according to the following ISO standards:

ISO 2941	Verification of collapse/burst resistance
ISO 2942	Verification of fabrication integrity
ISO 2943	Verification of material compatibility with fluids
ISO 3723	Method for end load test
ISO 3724	Verification of flow fatigue characteristics
ISO 3968	Evaluation of pressure drop versus flow characteristics
ISO 16889	Multi-pass method for evaluating filtration performance